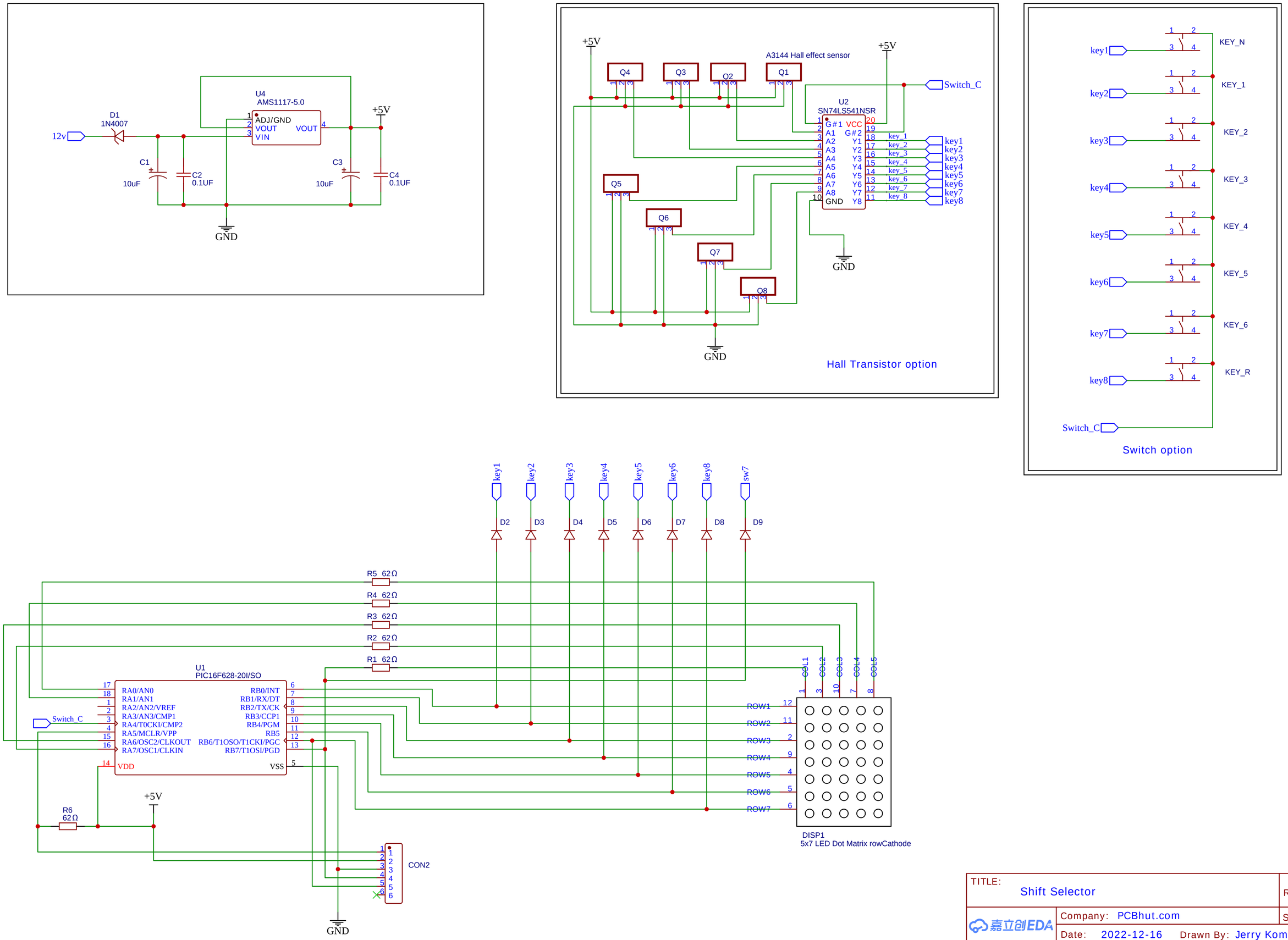


| | |
|---|---|
| TITLE: Shift Selector | REV: 1.0 |
| Company: PCBhut.com | Sheet: 1/1 |
| Date: 2022-12-16 Drawn By: Jerry Komor | |

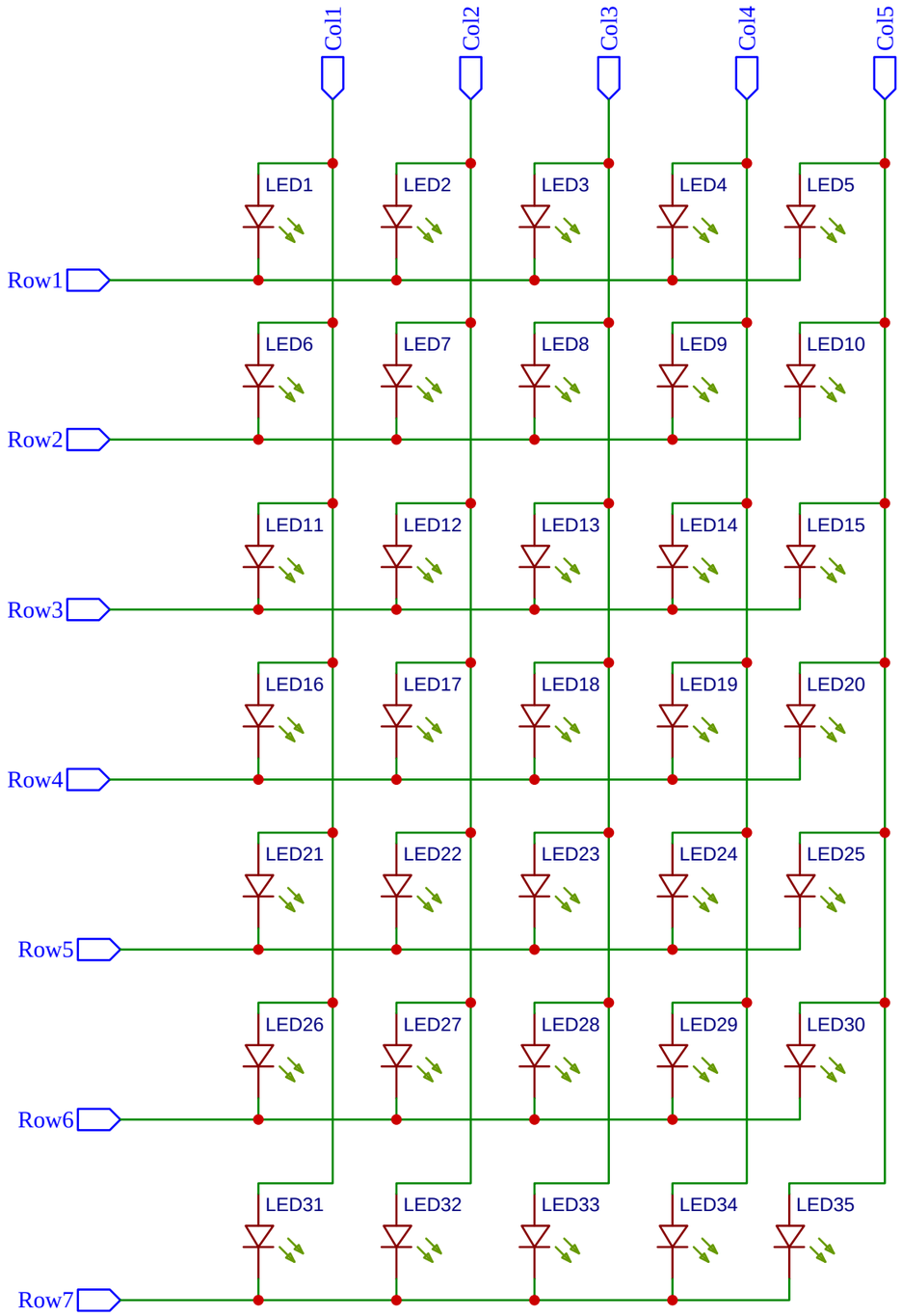


| | | |
|---|---|---|
| TITLE: 5x7 LED matrix | | REV: 1.0 |
| 嘉立创EDA | Company: PCBhut.com | Sheet: 1/1 |
| | Date: 2022-12-17 Drawn By: Jerry Komor | |