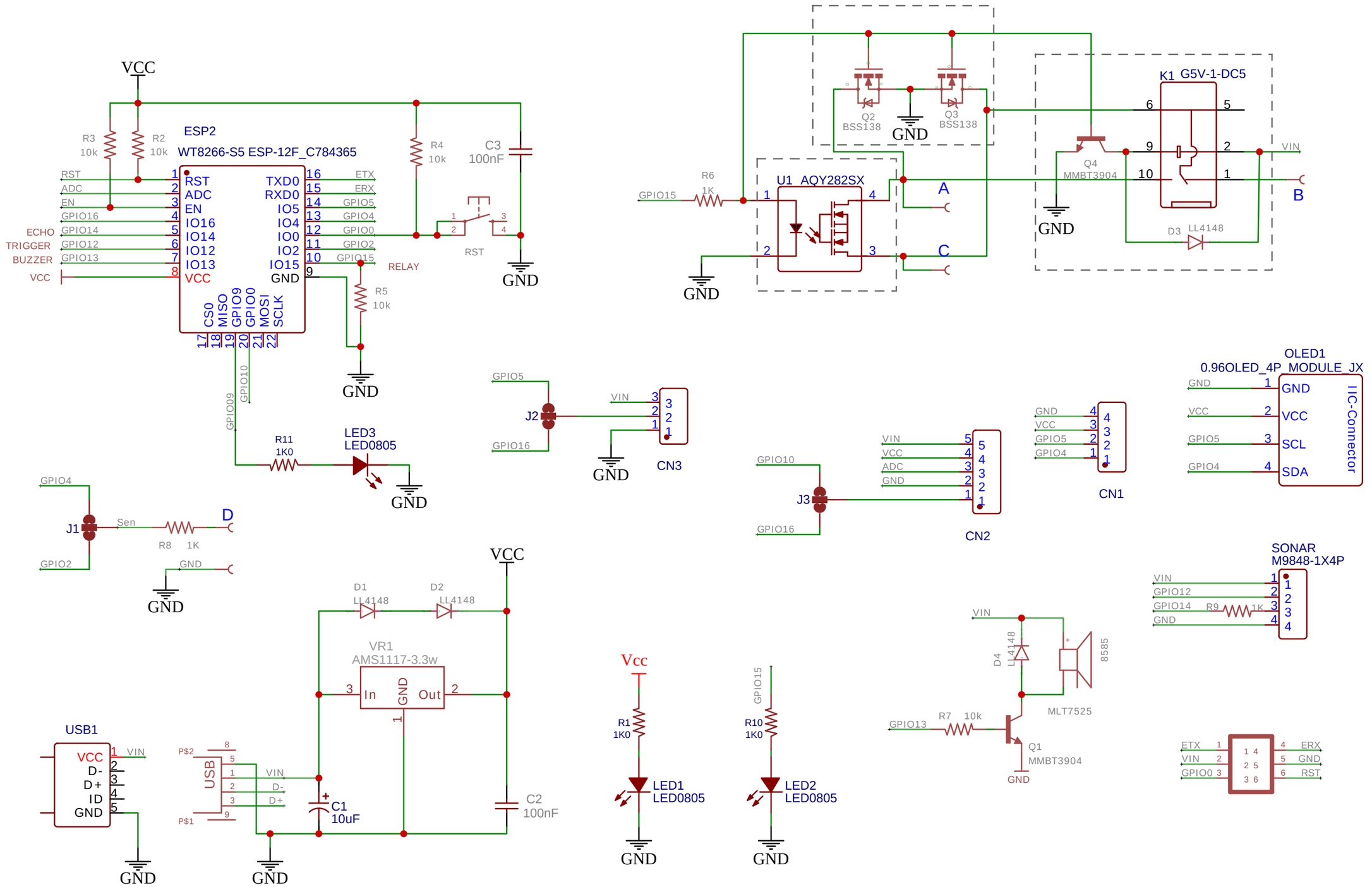

TITLE: Garage Opener	REV: 0.11
EasyEDA — Company: PCBhut.com	Sheet: 1/1
Date: 2025-05-23 Drawn By: Jerry Komor	