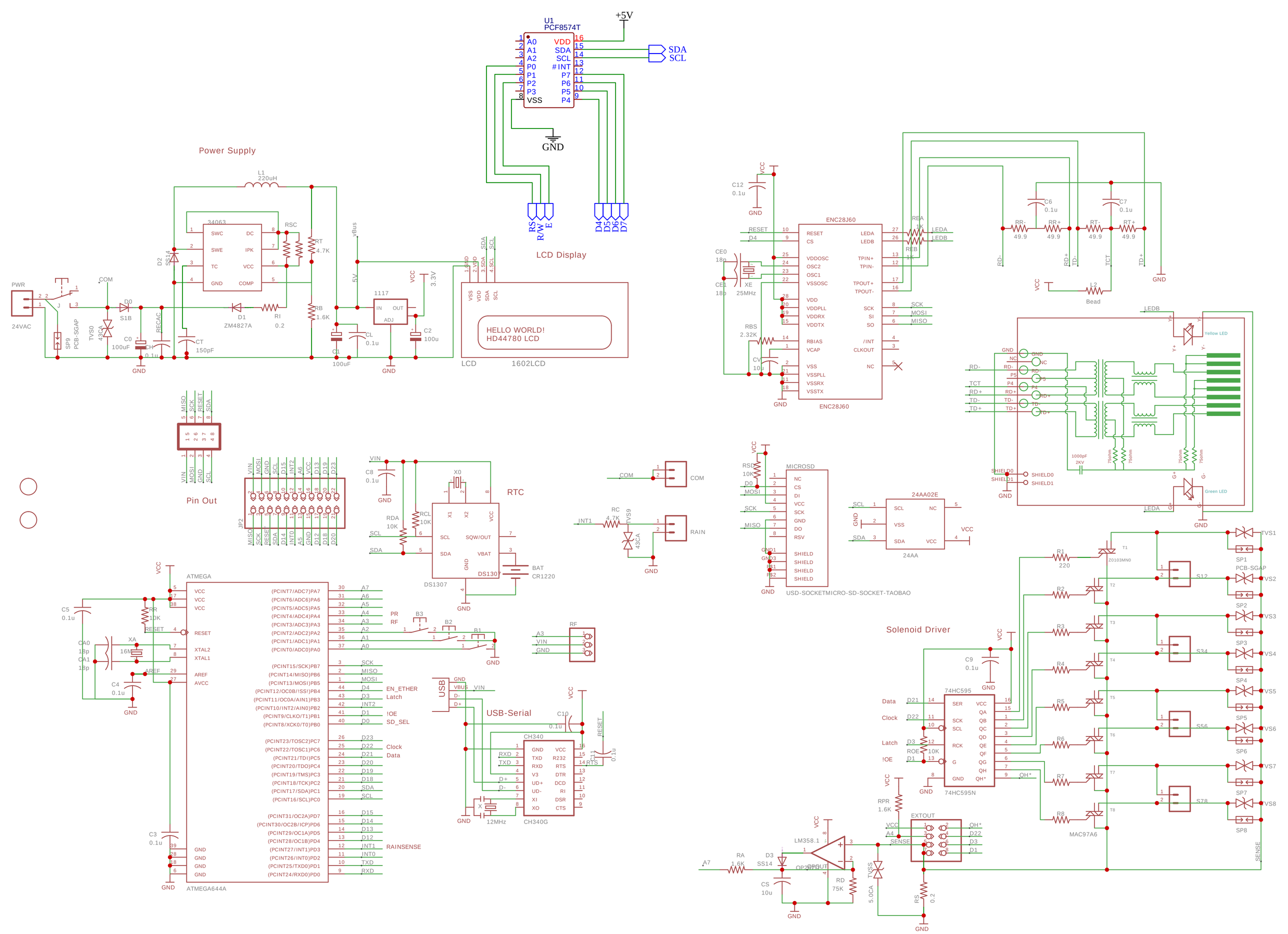
U1
PCF8574T
+5V
SDA
SCL
GND
RS
R/W
E
D4
D5
D6
D7
LCD Display
Power Supply
L1
220uH
34063
SWC
SWE
TC
GND
DC
IPK
VCC
COMP
RSC
RT
4.7K
RB
1.6K
D2
SS14
D1
ZM4827A
RI
0.2
PWR
24VAC
J
COM
D0
S1B
TVS0
43CA
SP9
PCB-SGAP
RECAC
C0
100uF
CH
0.1u
CT
150pF
1117
IN
OUT
ADJ
C1
100uF
CL
0.1u
C2
100u
3.3V
VCC
5V
vBus
HELLO WORLD!
HD44780 LCD
LCD
1602LCD
Pin Out
MISO
SCK
RESET
SDA
VIN
MOSI
GND
SCL
JP2
RTC
X0
X1
X2
SQW/OUT
VBAT
DS1307
BAT
CR1220
C8
0.1u
RDA
10K
RCL
10K
COM
RAIN
INT1
RC
4.7K
TVS9
43CA
MICROSD
RSD
10K
USD-SOCKETMICRO-SD-SOCKET-TAOBAO
24AA02E
24AA
ATMEGA
ATMEGA644A
C5
0.1u
RR
10K
XA
16M
CA0
18p
CA1
18p
C4
0.1u
C3
0.1u
PR
RF
B3
B2
B1
A3
VIN
GND
USB
USB-Serial
CH340
CH340G
12MHz
C10
0.1u
C11
0.1u
RXD
TXD
D+
D-
RTS
RESET
EN_ETHER
Latch
!OE
SD_SEL
Clock
Data
RAINSENSE
ENC28J60
C12
0.1u
CE0
18p
CE1
18p
XE
25MHz
RBS
2.32K
CV
10u
RESET
CS
D4
VDDOSC
OSC2
OSC1
VSSOSC
VDD
VDDPLL
VDDRX
VDDTX
RBIAS
VCAP
VSS
VSSPLL
VSSRX
VSSTX
LEDA
LEDB
TPIN+
TPIN-
TPOUT+
TPOUT-
SCK
SI
SO
/INT
CLKOUT
NC
REA
1K
REB
1K
SCK
MOSI
MISO
C6
0.1u
C7
0.1u
RR-
49.9
RR+
49.9
RT-
49.9
RT+
49.9
L2
Bead
RD-
RD+
TD-
TCT
TD+
GND
VCC
LEDB
LEDA
Yellow LED
Green LED
SHIELD0
SHIELD1
1000pF
2KV
75ohm
Solenoid Driver
74HC595
74HC595N
Data
Clock
Latch
!OE
D21
D22
D3
D1
ROE
10K
C9
0.1u
QH*
RPR
1.6K
EXTOUT
A4
SENSE
LM358.1
OP2
OPOUT
A7
RA
1.6K
D3
SS14
CS
10u
RD
75K
TVSS
5.0CA
RS
0.2
R1
220
R2
R3
R4
R5
R6
R7
R8
Z0103MN0
MAC97A6
TVS1
SP1
PCB-SGAP
VS2
S12
SP2
VS3
S34
SP3
VS4
SP4
VS5
S56
SP5
VS6
SP6
VS7
S78
SP7
VS8
SP8
SENSE

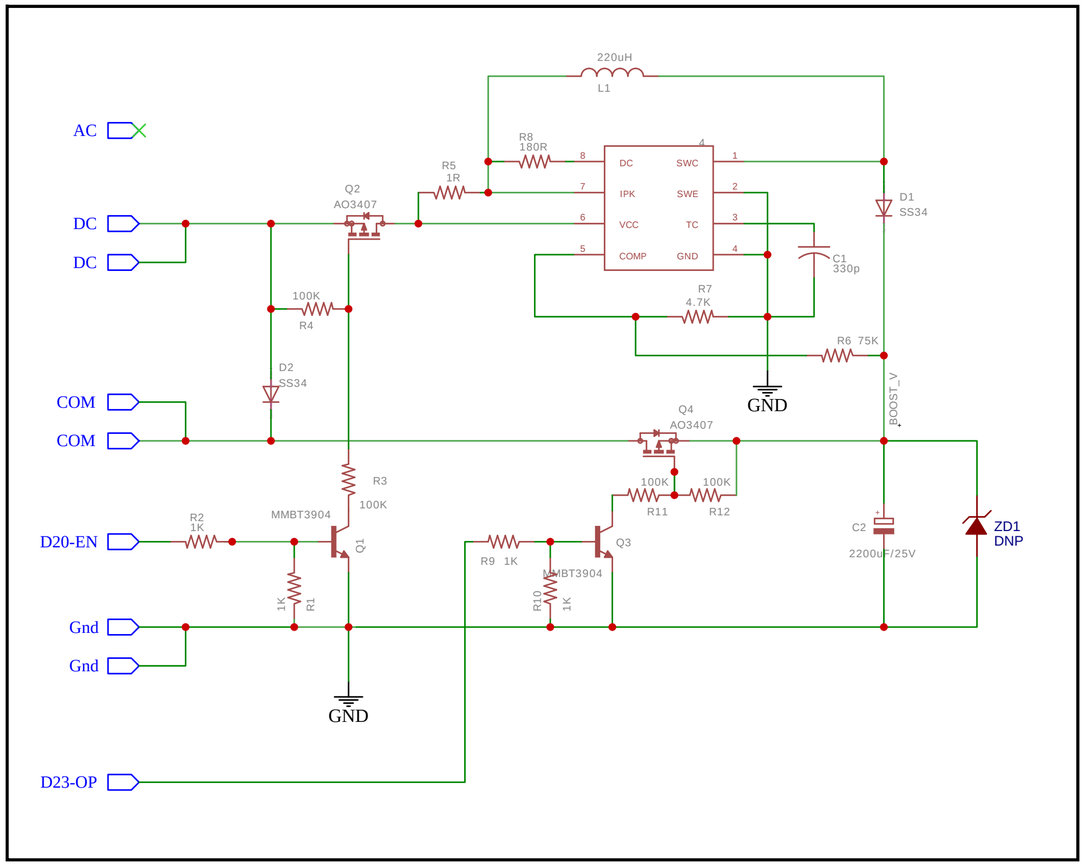

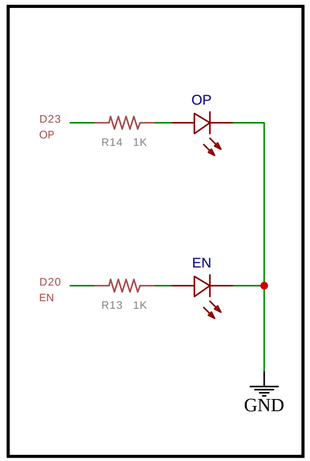

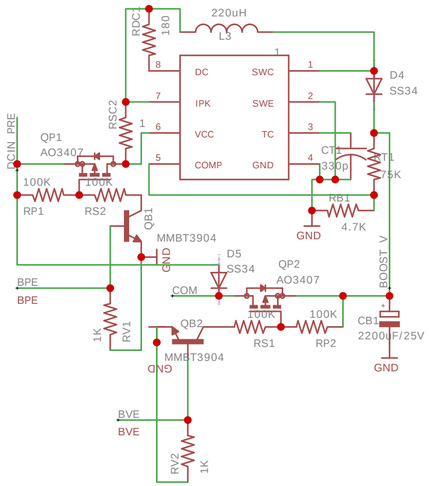

TITLE: DC Booster		REV: 1.0
EasyEDA	Company: PCBhut.com	Sheet: 1/1
	Date: 2022-05-29 Drawn By: Jerry Komor	