Power Input **Voltage Regulator** **Connectors**

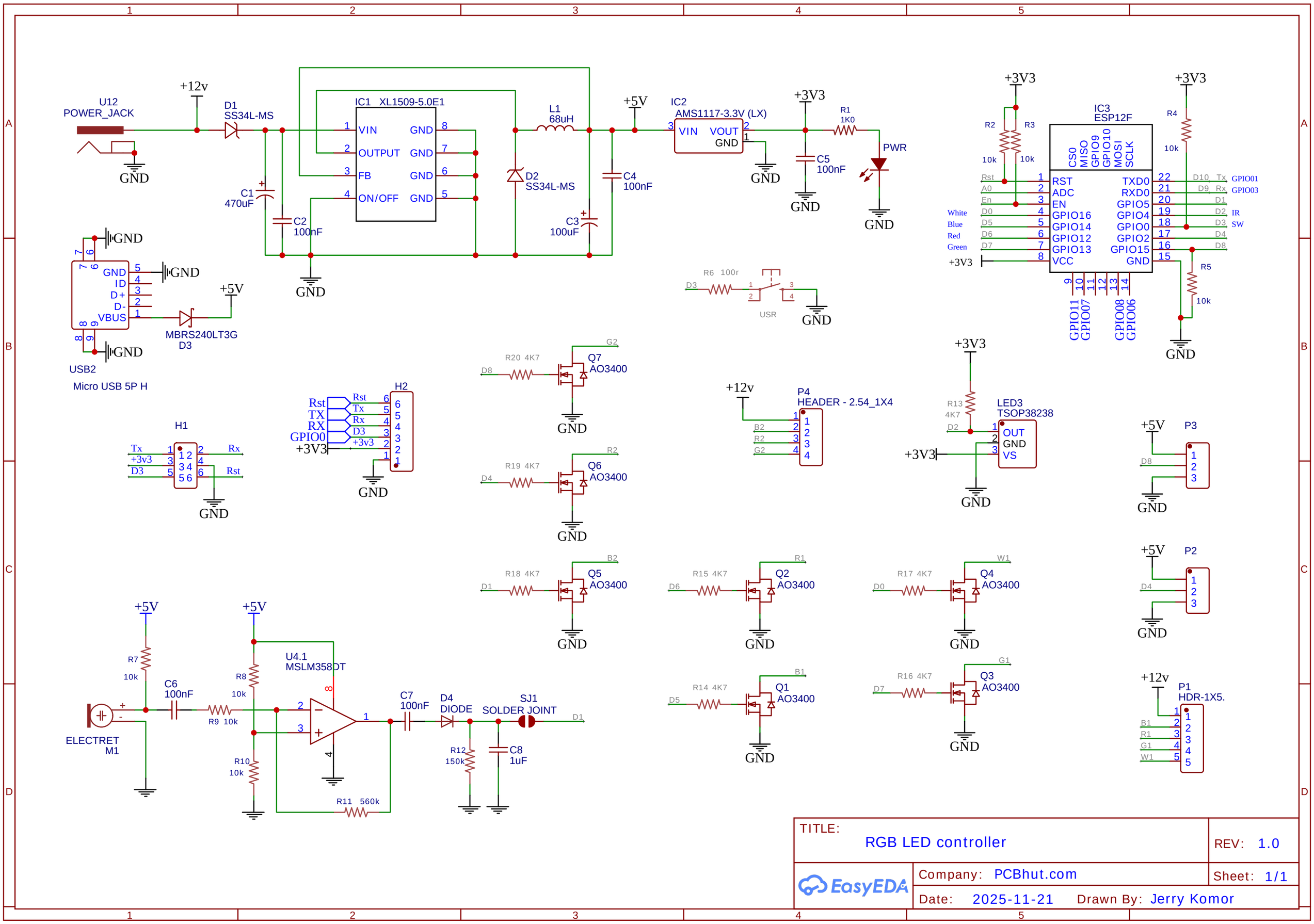
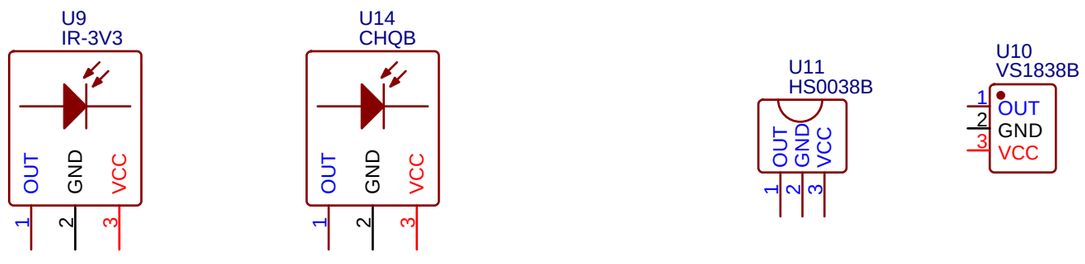
TITLE: RGB LED controller	REV: 1.0
EasyEDA Company: PCBhut.com	Sheet: 1/1
Date: 2025-11-21 Drawn By: Jerry Komor