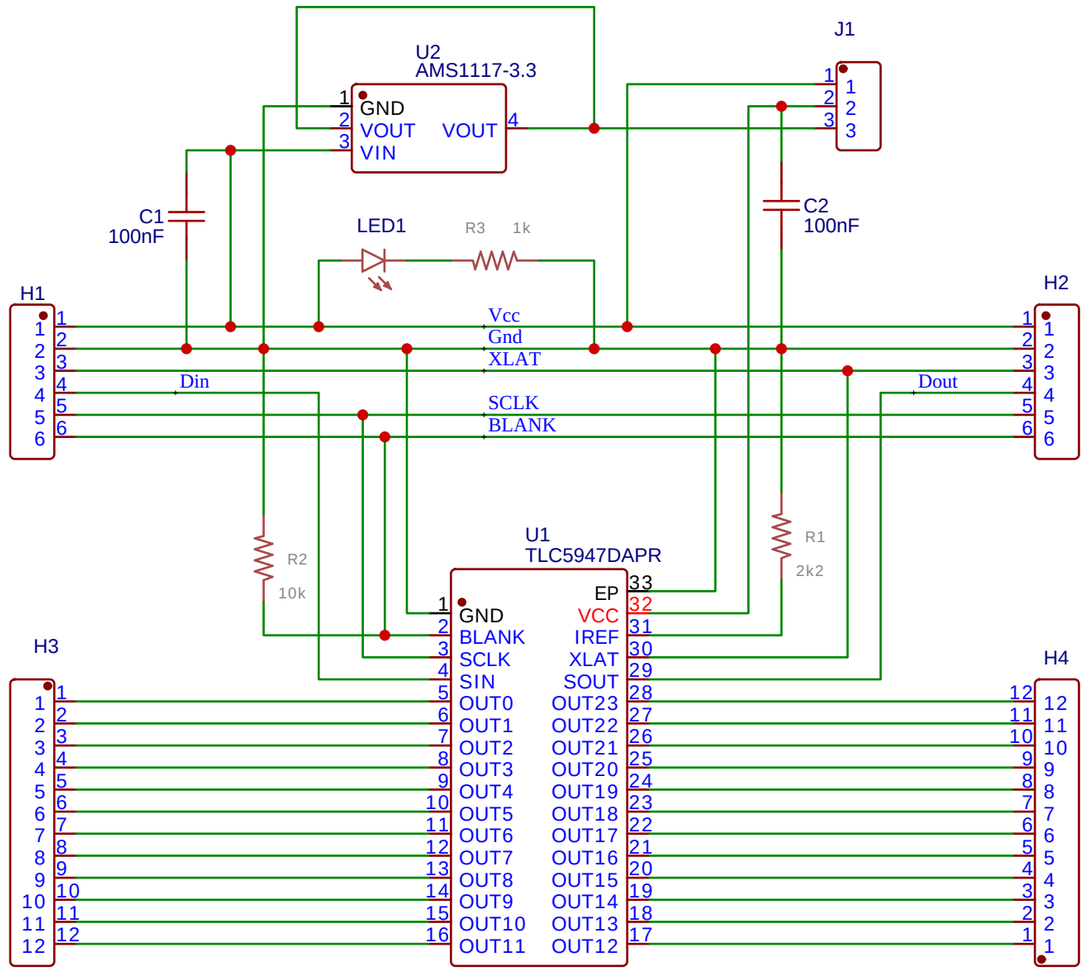

TITLE: TLC5947 Break out		REV: 1.0
嘉立创EDA	Company: PCBhut.com	Sheet: 1/1
	Date: 2022-12-23 Drawn By: Jerry Komor	