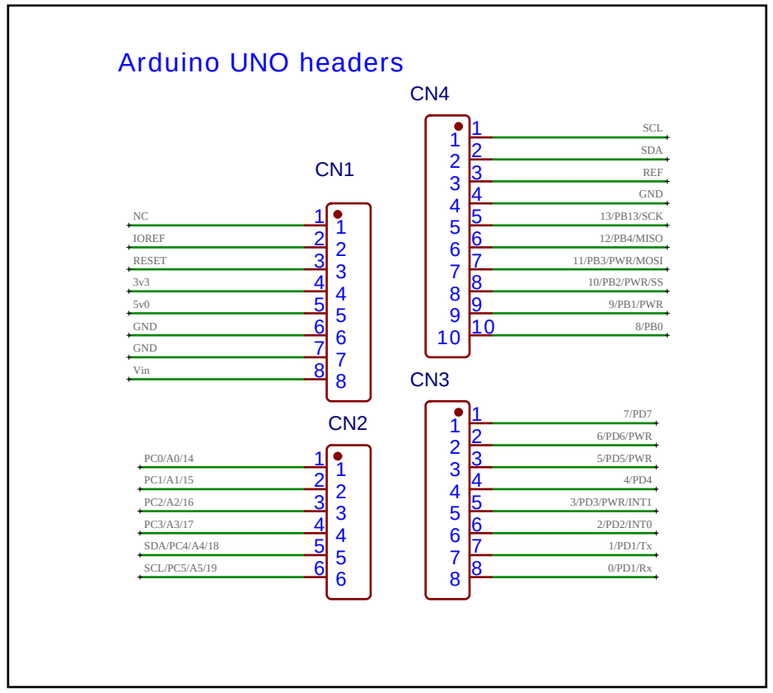

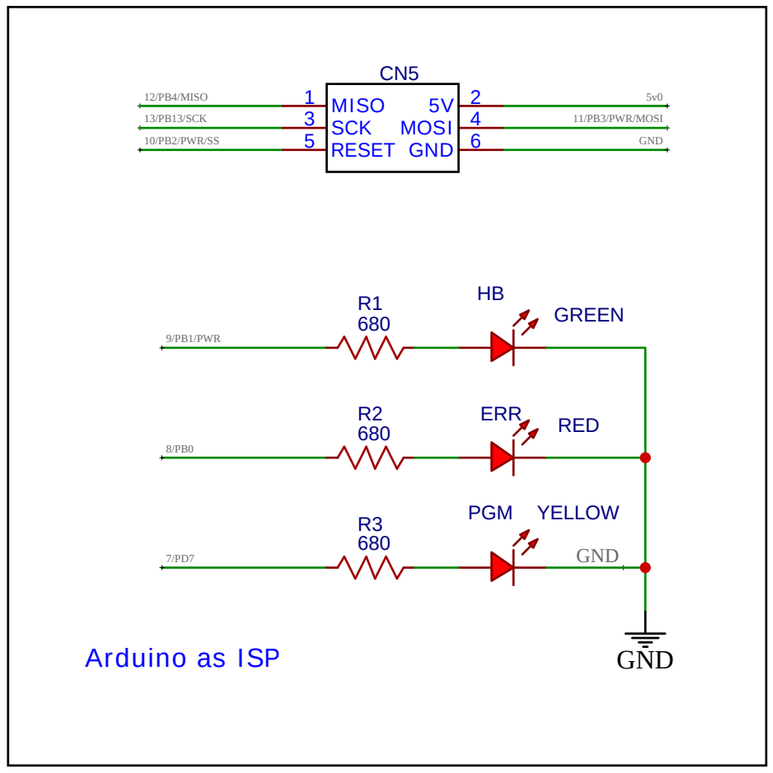

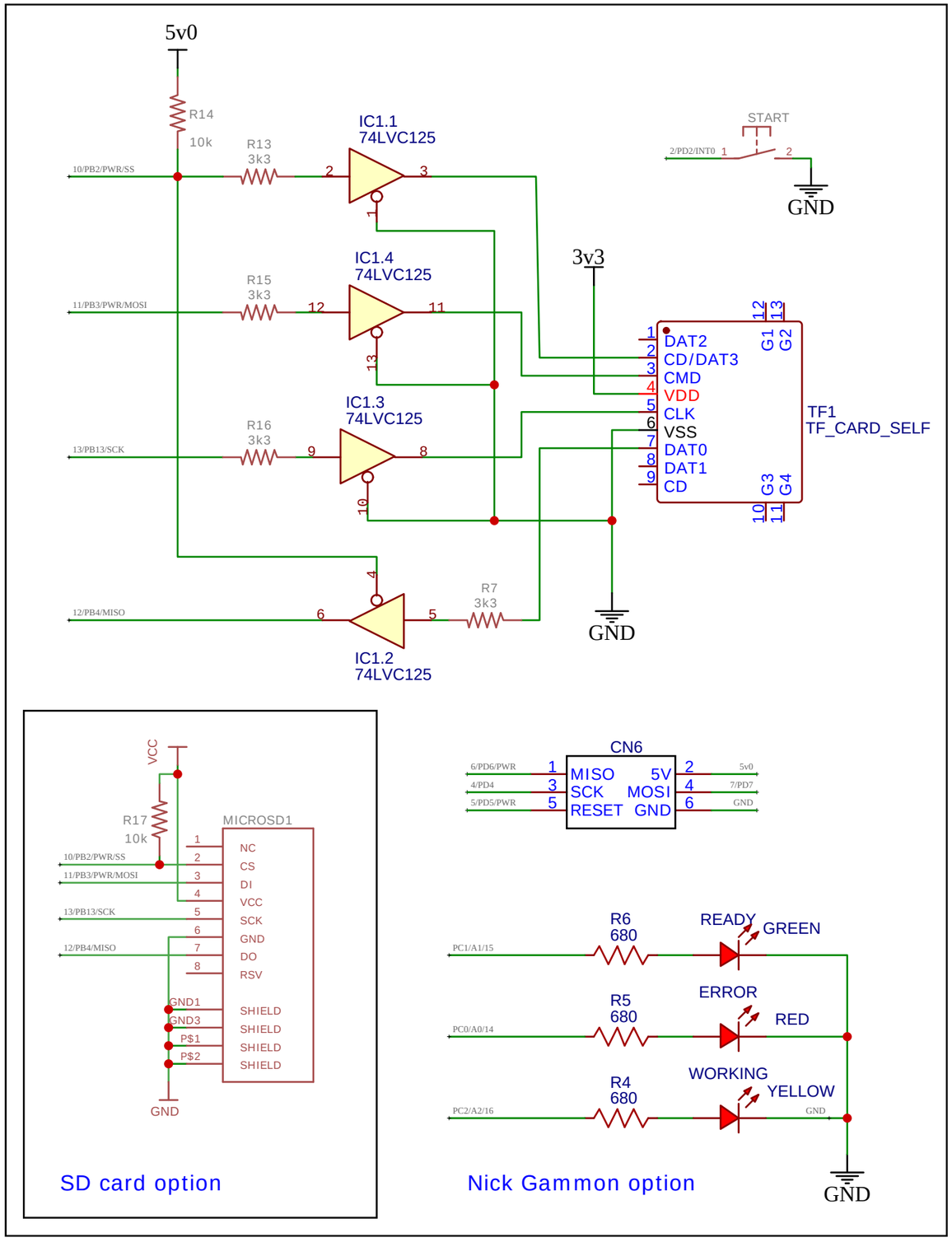

TITLE: UNO ATtiny 2in1 programmer		REV: 1.0
EasyEDA	Company: BCPhut.com	Sheet: 1/1
	Date: 2024-06-20 Drawn By: Jerry Komor	