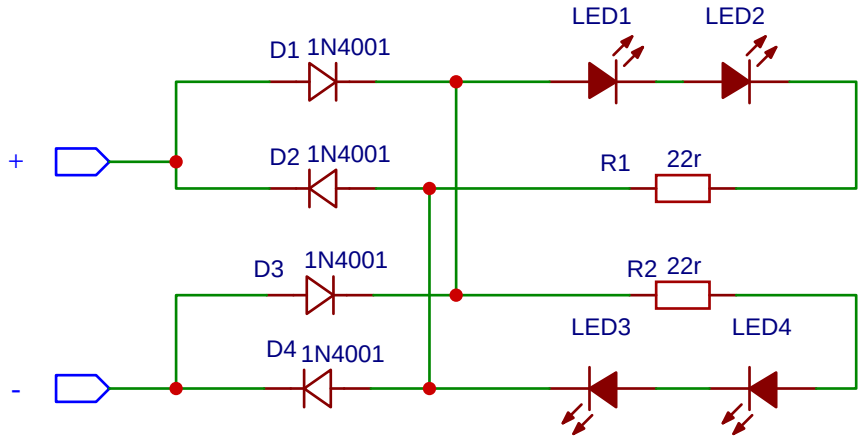

TITLE: T-10 light		REV: 1.0
EasyEDA	Company: PCBhut.com	Sheet: 1/1
	Date: 2022-07-20 Drawn By: Jerry Komor	